Pearl

VPS 15 NEMA MOTOR BRACKET

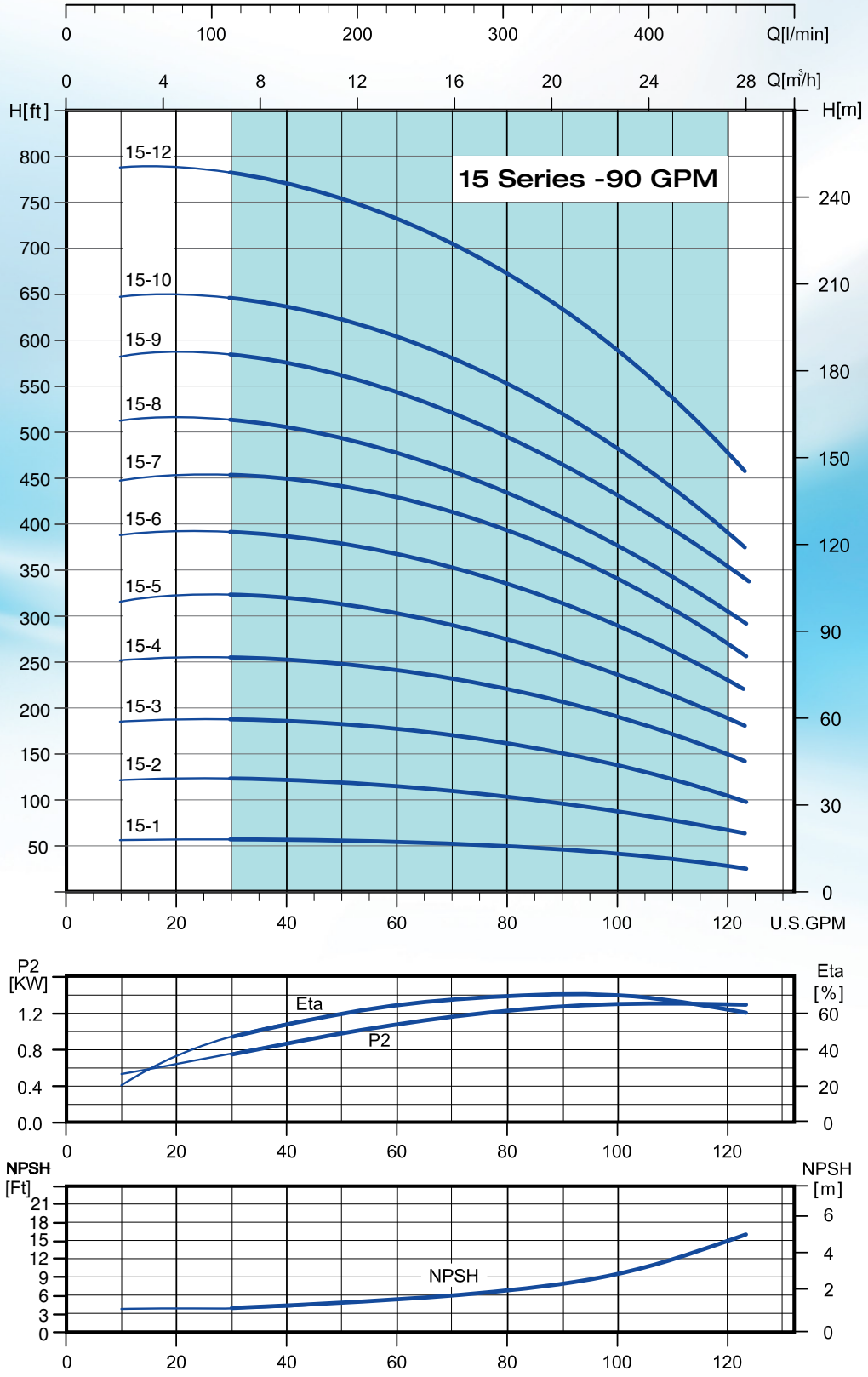

ISO 9906 Annex A

VPS 15 NEMA MOTOR BRACKET

Dimensions and weights

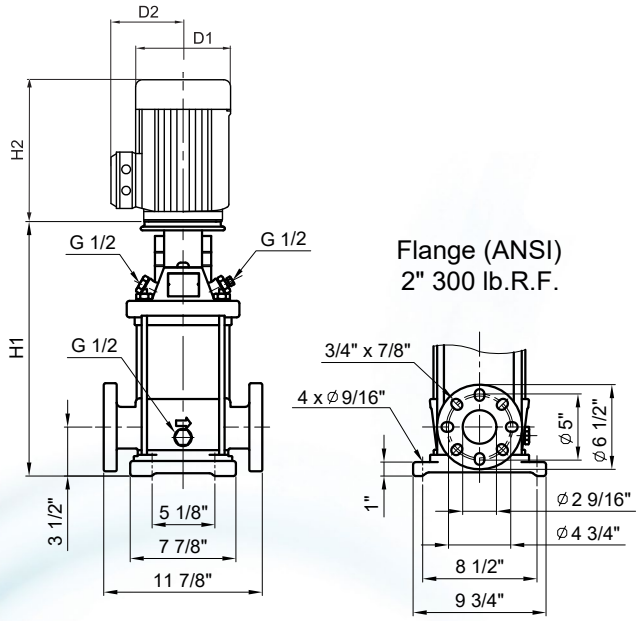

MODEL	HP	MOTOR FRAME	ODP MOTOR	TEFC MOTOR	DIMENSIONS AND WEIGHT FOR VPS SERIES - NEMA MOTORS																		NET WEIGHT		NET WEIGHT	
					H1		H2		H2		D1		D1		D2		D2		D3		D3					
					PUMP END		ODP		TEFC		ODP		TEFC		ODP		TEFC		ODP		TEFC		ODP		TEFC	
					in	mm	in	mm	in	mm	in	mm	in	mm	in	mm	in	mm	in	mm	in	mm	lbs	kg	lbs	kg
SINGLE PHASE MOTOR																										
VPS 15-1	2	56C	MVB 20F16O	MVB 20F16T	16 1/8	409	11 1/4	284	12	304	7 1/4	183	7 1/4	183	5 3/4	145	5 3/4	146	6 1/2	165	6 1/2	165	131	60	115	53
VPS 15-2	5	182TC	-	MVB 50C16T	17 1/8	435	-	-	15 3/8	389	-	-	8 5/8	219	-	-	7	175	-	-	9	226	-	-	158	72
VPS 15-3	5	182TC	-	MVB 50C16T	18 3/8	465	-	-	15 3/8	389	-	-	8 5/8	219	-	-	7	175	-	-	9	226	-	-	161	74
VPS 15-5	10	213TC	-	MVB 100C16T	23	584	-	-	16 3/8	417	-	-	10 3/8	262	-	-	9 1/4	233	-	-	9 1/8	230	-	-	266	121
VPS 15-6	10	213TC	-	MVB 100C16T	24 1/8	611	-	-	16 3/8	417	-	-	10 3/8	262	-	-	9 1/4	233	-	-	9 1/8	230	-	-	285	130
THREE PHASE MOTOR																										
VPS 15-1	2	56C	MVB 20H36O	MVB 20H36T	16 1/8	409	11 1/4	284	11 1/4	284	7 1/4	183	7	179	5 5/8	143	5 3/4	147	6 1/2	165	6 1/2	165	108	49	108	49
VPS 15-2	5	182TC	MVB 50H36O	MVB 50H36T	17 1/8	435	13 5/8	344	13 3/4	348	9	227	8 1/2	216	5 5/8	143	7	175	9 1/8	230	9	226	130	59	141	64
VPS 15-3	5	182TC	MVB 50H36O	MVB 50H36T	18 3/8	465	13 5/8	344	13 3/4	348	9	227	8 1/2	216	5 5/8	143	7	175	9 1/8	230	9	226	133	61	144	66
VPS 15-4	7.5	213TC	-	MVB 75H36T	21 1/4	539	-	-	15 1/4	386	-	-	8 5/8	219	-	-	6	151	-	-	9	226	-	-	192	88
VPS 15-5	10	213TC	MVB 100H36O	MVB 100H36T	23	584	14 5/8	371	15 1/4	388	10 1/4	259	10 3/8	262	8	201	8 1/8	205	9 1/8	230	9 1/8	230	220	100	224	102
VPS 15-6	10	213TC	MVB 100H36O	MVB 100H36T	24 1/8	612	14 5/8	371	15 1/4	388	10 1/4	259	10 3/8	262	8	201	8 1/8	205	9 1/8	230	9 1/8	230	239	109	243	111
VPS 15-7	15	254TC	-	MVB 150H36T	29 1/4	741	-	-	16 3/8	415	-	-	10 3/8	262	-	-	9 1/4	235	-	-	9 1/8	232	-	-	346	157
VPS 15-8	15	254TC	-	MVB 150H36T	31	786	-	-	16 3/8	415	-	-	10 3/8	262	-	-	9 1/4	235	-	-	9 1/8	232	-	-	349	159
VPS 15-9	15	254TC	-	MVB 150H36T	32 3/4	831	-	-	16 3/8	415	-	-	10 3/8	262	-	-	9 1/4	235	-	-	9 1/8	232	-	-	353	161
VPS 15-10	20	254TC	MVB 200H36O	MVB 200H36T	34 1/2	876	18 1/4	464	20	503	11 1/2	293	13	329	9 1/2	242	10 1/8	256	9 1/2	241	9 1/8	231	316	144	360	164
VPS 15-12	25	284TSC	-	MVB 250H36T	37 1/4	946	-	-	19 1/4	487	-	-	13	329	-	-	11 5/8	293	-	-	11 1/4	285	-	-	420	191

- Product unavailable.
All measures must be used as reference only. Values may vary according to motor model.
All measures and performances also apply for the VPC Series.