Pearl

VPS 1 NEMA MOTOR BRACKET

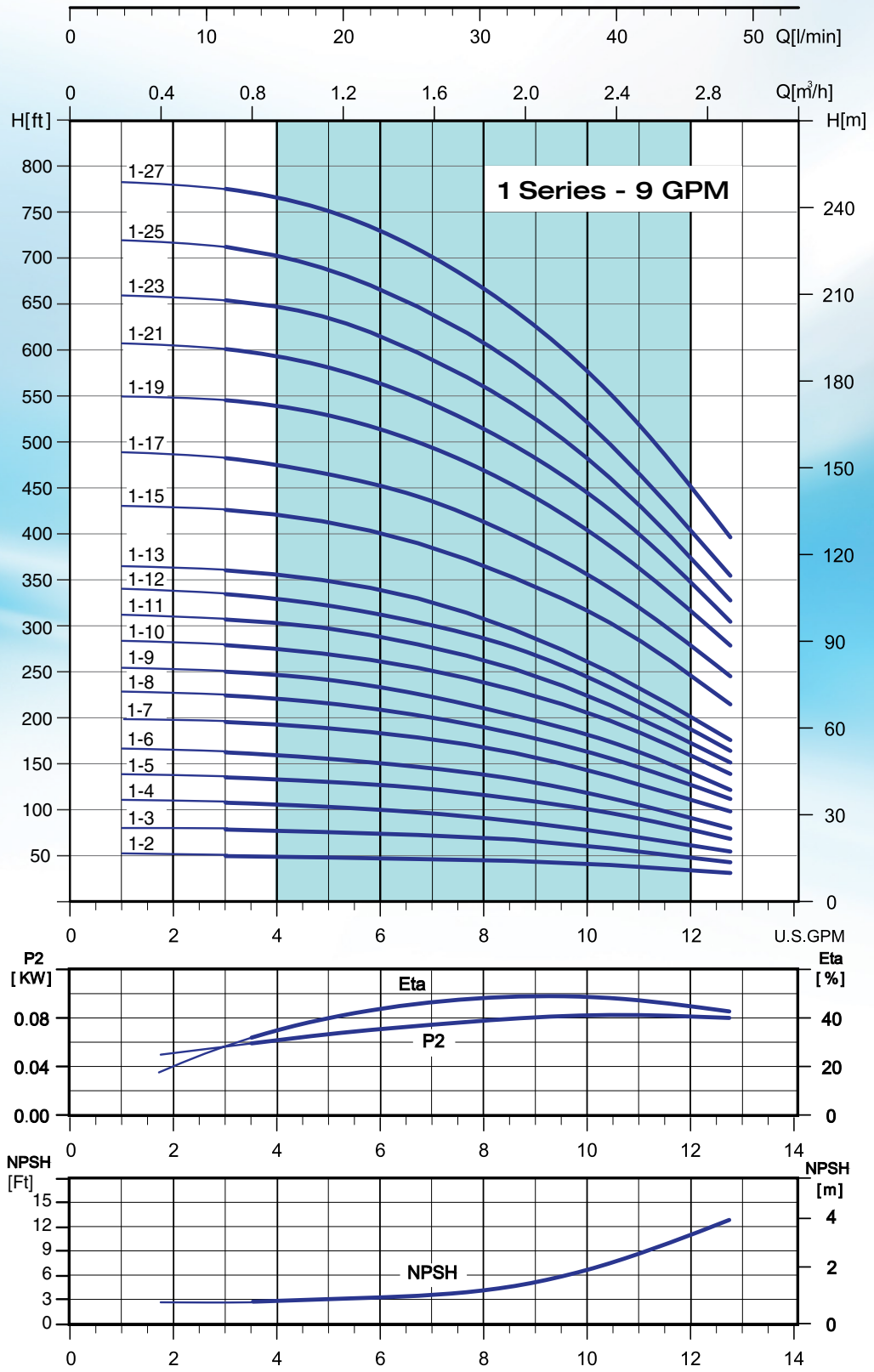

VPS 1 NEMA MOTOR BRACKET

Dimensions and weights

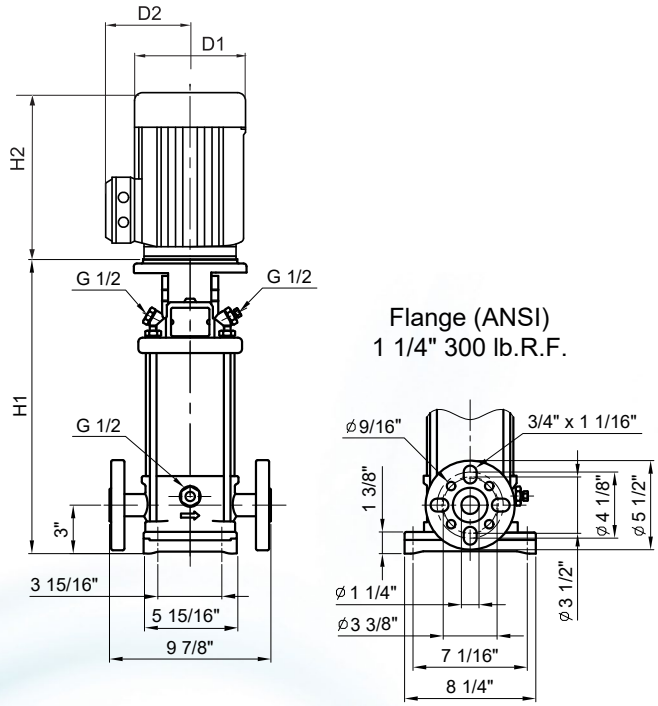

MODEL	HP	MOTOR FRAME	ODP MOTOR	TEFC MOTOR	DIMENSIONS AND WEIGHT FOR VPS SERIES - NEMA MOTORS																					
					H1		H2		H2		D1		D1		D2		D2		D3		D3		NET WEIGHT		NET WEIGHT	
					PUMP END		ODP		TEFC		ODP		TEFC		ODP		TEFC		ODP		TEFC		ODP		TEFC	
					in	mm	in	mm	in	mm	in	mm	in	mm	in	mm	in	mm	in	mm	in	mm	lbs	kg	lbs	kg
SINGLE PHASE MOTOR																										
VPS 1-2	0.5	56C	MVB 05F16O	MVB 05F16T	12 1/8	306	10	249	9 1/4	233	6 1/4	158	6 1/4	158	5 1/8	129	5 1/4	132	6	150	6	148	52	24	51	24
VPS 1-3	0.5	56C	MVB 05F16O	MVB 05F16T	12 1/8	306	10	249	9 1/4	233	6 1/4	158	6 1/4	158	5 1/8	129	5 1/4	132	6	150	6	148	54	25	53	25
VPS 1-4	0.5	56C	MVB 05F16O	MVB 05F16T	13	324	10	249	9 1/4	233	6 1/4	158	6 1/4	158	5 1/8	129	5 1/4	132	6	150	6	148	54	25	53	25
VPS 1-5	0.5	56C	MVB 05F16O	MVB 05F16T	13 1/2	342	10	249	9 1/4	233	6 1/4	158	6 1/4	158	5 1/8	129	5 1/4	132	6	150	6	148	57	26	56	26
VPS 1-6	0.75	56C	MVB 07F16O	MVB 07F16T	14 1/4	360	10 5/8	270	10	249	6 1/4	158	6 1/4	158	5 1/8	129	5 1/4	132	6	148	6	148	72	33	62	29
VPS 1-7	0.75	56C	MVB 07F16O	MVB 07F16T	15	377	10 5/8	270	10	249	6 1/4	158	6 1/4	158	5 1/8	129	5 1/4	132	6	148	6	148	76	35	66	30
VPS 1-8	1	56C	MVB 10F16O	MVB 10F16T	15 5/8	395	11 1/4	284	10 1/8	256	6 5/8	169	7 1/4	183	5 3/4	145	5 3/4	147	6 1/2	165	6 1/2	165	82	38	75	35
VPS 1-9	1	56C	MVB 10F16O	MVB 10F16T	16 1/4	413	11 1/4	284	10 1/8	256	6 5/8	169	7 1/4	183	5 3/4	145	5 3/4	147	6 1/2	165	6 1/2	165	82	38	75	35
VPS 1-10	1	56C	MVB 10F16O	MVB 10F16T	17	431	11 1/4	284	10 1/8	256	6 5/8	169	7 1/4	183	5 3/4	145	5 3/4	147	6 1/2	165	6 1/2	165	83	38	76	35
VPS 1-11	1.5	56C	MVB 15F16O	MVB 15F16T	17 3/4	449	11 1/4	284	11 1/8	281	7 1/4	183	7 1/4	183	5 3/4	145	5 3/4	147	6 1/2	165	6 1/2	165	92	42	80	37
VPS 1-12	1.5	56C	MVB 15F16O	MVB 15F16T	18 1/2	467	11 1/4	284	11 1/8	281	7 1/4	183	7 1/4	183	5 3/4	145	5 3/4	147	6 1/2	165	6 1/2	165	92	42	80	37
VPS 1-13	1.5	56C	MVB 15F16O	MVB 15F16T	19 1/8	485	11 1/4	284	11 1/8	281	7 1/4	183	7 1/4	183	5 3/4	145	5 3/4	147	6 1/2	165	6 1/2	165	95	44	83	38
VPS 1-15	2	56C	MVB 20F16O	MVB 20F16T	20 5/8	522	11 1/4	284	12	304	7 1/4	183	7 1/4	183	5 3/4	145	5 3/4	146	6 1/2	165	6 1/2	165	112	51	96	44
VPS 1-17	2	56C	MVB 20F16O	MVB 20F16T	22	558	11 1/4	284	12	304	7 1/4	183	7 1/4	183	5 3/4	145	5 3/4	146	6 1/2	165	6 1/2	165	113	52	97	44
VPS 1-19	2	56C	MVB 20F16O	MVB 20F16T	23 1/2	595	11 1/4	284	12	304	7 1/4	183	7 1/4	183	5 3/4	145	5 3/4	146	6 1/2	165	6 1/2	165	115	53	99	45
VPS 1-21	3	182TC	MVB 30F16O	MVB 30F16T	25 3/4	654	12 1/2	316	13 3/4	348	9	227	8 5/8	219	5 5/8	143	7	175	9 1/8	230	9	226	111	51	123	56
VPS 1-23	3	182TC	MVB 30F16O	MVB 30F16T	27 1/4	690	12 1/2	316	13 3/4	348	9	227	8 5/8	219	5 5/8	143	7	175	9 1/8	230	9	226	113	52	125	57
VPS 1-25	3	182TC	MVB 30F16O	MVB 30F16T	28 5/8	726	12 1/2	316	13 3/4	348	9	227	8 5/8	219	5 5/8	143	7	175	9 1/8	230	9	226	115	53	127	58
VPS 1-27	3	182TC	MVB 30F16O	MVB 30F16T	30	762	12 1/2	316	13 3/4	348	9	227	8 5/8	219	5 5/8	143	7	175	9 1/8	230	9	226	117	54	129	59
THREE PHASE MOTOR																										
VPS 1-2	0.5	56C	MVB 05H36O	MVB 05H36T	12 1/8	306	9 1/4	233	9 3/8	236	6 1/4	158	6 1/4	158	5 1/8	129	5 1/4	132	6	150	6	148	52	24	48	22
VPS 1-3	0.5	56C	MVB 05H36O	MVB 05H36T	12 1/8	306	9 1/4	233	9 3/8	236	6 1/4	158	6 1/4	158	5 1/8	129	5 1/4	132	6	150	6	148	54	25	50	23
VPS 1-4	0.5	56C	MVB 05H36O	MVB 05H36T	13	324	9 1/4	233	9 3/8	236	6 1/4	158	6 1/4	158	5 1/8	129	5 1/4	132	6	150	6	148	54	25	50	23
VPS 1-5	0.5	56C	MVB 05H36O	MVB 05H36T	13 1/2	342	9 1/4	233	9 3/8	236	6 1/4	158	6 1/4	158	5 1/8	129	5 1/4	132	6	150	6	148	57	26	53	25
VPS 1-6	0.75	56C	MVB 07H36O	MVB 07H36T	14 1/4	360	9 1/4	233	9 3/8	236	6 1/4	158	6 1/4	158	5 1/8	129	5 1/4	132	6	150	6	148	58	27	54	25
VPS 1-7	0.75	56C	MVB 07H36O	MVB 07H36T	15	377	9 1/4	233	9 3/8	236	6 1/4	158	6 1/4	158	5 1/8	129	5 1/4	132	6	150	6	148	62	29	58	27
VPS 1-8	1	56C	MVB 10H36O	MVB 10H36T	15 5/8	395	10	249	10 1/4	259	6 1/4	158	7	179	5 1/8	129	5 3/4	147	6	150	6 1/2	165	66	30	71	33
VPS 1-9	1	56C	MVB 10H36O	MVB 10H36T	16 1/4	413	10	249	10 1/4	259	6 1/4	158	7	179	5 1/8	129	5 3/4	147	6	150	6 1/2	165	66	30	71	33
VPS 1-10	1	56C	MVB 10H36O	MVB 10H36T	17	431	10	249	10 1/4	259	6 1/4	158	7	179	5 1/8	129	5 3/4	147	6	150	6 1/2	165	67	31	72	33
VPS 1-11	1.5	56C	MVB 15H36O	MVB 15H36T	17 3/4	449	10 1/4	259	10 1/4	259	7 1/4	183	7	179	5 5/8	143	5 3/4	147	6 1/2	165	6 1/2	165	74	34	75	35
VPS 1-12	1.5	56C	MVB 15H36O	MVB 15H36T	18 1/2	467	10 1/4	259	10 1/4	259	7 1/4	183	7	179	5 5/8	143	5 3/4	147	6 1/2	165	6 1/2	165	74	34	75	35
VPS 1-13	1.5	56C	MVB 15H36O	MVB 15H36T	19 1/8	485	10 1/4	259	10 1/4	259	7 1/4	183	7	179	5 5/8	143	5 3/4	147	6 1/2	165	6 1/2	165	77	35	78	36
VPS 1-15	2	56C	MVB 20H36O	MVB 20H36T	20 5/8	522	11 1/4	284	11 1/4	284	7 1/4	183	7	179	5 5/8	143	5 3/4	147	6 1/2	165	6 1/2	165	89	41	89	41
VPS 1-17	2	56C	MVB 20H36O	MVB 20H36T	22	558	11 1/4	284	11 1/4	284	7 1/4	183	7	179	5 5/8	143	5 3/4	147	6 1/2	165	6 1/2	165	90	41	90	41
VPS 1-19	2	56C	MVB 20H36O	MVB 20H36T	23 1/2	595	11 1/4	284	11 1/4	284	7 1/4	183	7	179	5 5/8	143	5 3/4	147	6 1/2	165	6 1/2	165	92	42	92	42
VPS 1-21	3	56C	MVB 30H36O	MVB 30H36T-1	25 3/4	654	11 1/4	284	12 1/2	316	7 1/4	183	7 1/4	183	5 5/8	143	5 3/4	147	6 1/2	165	6 1/2	165	104	48	104	48
VPS 1-23	3	56C	MVB 30H36O	MVB 30H36T-1	27 1/4	690	11 1/4	284	12 1/8	306	7 1/4	183	7 1/4	183	5 5/8	143	5 3/4	147	6 1/2	165	6 1/2	165	106	49	106	49
VPS 1-25	3	56C	MVB 30H36O	MVB 30H36T-1	28 5/8	726	11 1/4	284	12 1/8	306	7 1/4	183	7 1/4	183	5 5/8	143	5 3/4	147	6 1/2	165	6 1/2	165	107	49	107	49
VPS 1-27	3	56C	MVB 30H36O	MVB 30H36T-1	30	762	11 1/4	284	12 1/8	306	7 1/4	183	7 1/4	183	5 5/8	143	5 3/4	147	6 1/2	165	6 1/2	165	109	50	109	50

- Product unavailable

All measures must be used as reference only. Values may vary according to motor model.
All measures and performances also apply for the VPC Series.